DECA Lab Logbook — Spring Term

Lab 3 | Task 1: EEP1P Pipeline

Task 1: Understanding the EEP1P Pipeline

Objectives

- Observe pipeline behaviour using the waveform simulator
- Derive state diagrams for FF1 and EXEC2FF
- Explain LDR vs STR signal timing and the effect of INITV

1.1 Waveform Simulation — First Nine Clock Cycles

Display the first nine clock cycles of the ee1p sheet of the lab3p design running the testpipeline.ram program in the waveform simulator. Configure the simulator to show INSREG.Q, DOUTREG.Q, CPENV, EXEC2V, INITV, together with the PC and register values.

```
MOV R0, #7
STR R0, [0x0040]
LDR R3, [0x0040]
SUB R4, R3, R0     // should be 0
ADD R0, #1
STR R0, [0x0041]
ADD R0, #1
JMP -1
```

Key observations from the waveform:

- INITV is high during clock cycle 0 only, initialising the pipeline before normal instruction flow begins.
- EXEC2V pulses high whenever a memory instruction (LDR or STR) enters the EXEC2 stage, causing the pipeline to stall for one cycle.
- INSREG.Q holds the same instruction value across cycles 3 and 4 because the LDR instruction requires two execution cycles (EXEC1 + EXEC2), stalling the FETCH of the next instruction.
- R0 is written with 0x0007 (= 7) after cycle 1 (MOV R0, #7 completes).
- R3 receives the value loaded from memory [0x0040] = 7, written back during the EXEC2 stage of LDR.
- R4 = R3 − R0 = 7 − 7 = 0 after the SUB instruction.

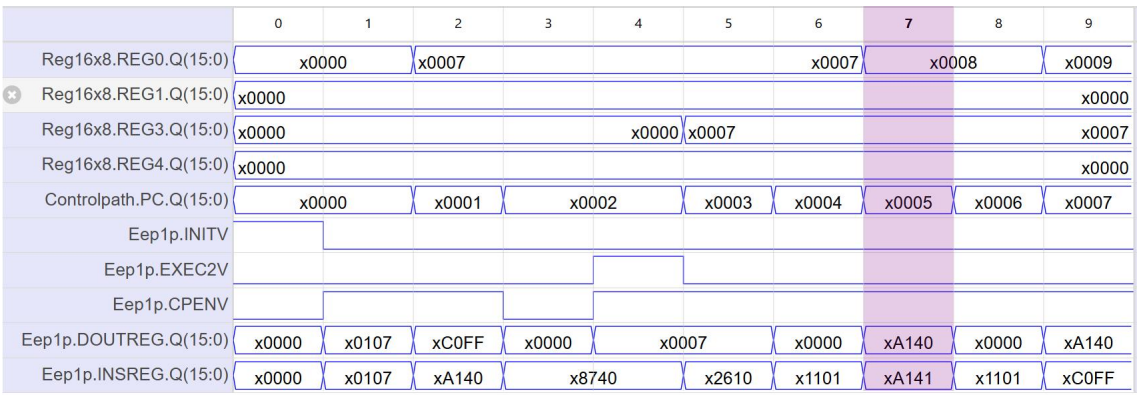

1.2 State Diagrams: FF1 and EXEC2FF

Load the statemachine sheet of ee1p to examine the design of SM1. The two flip-flops implement two independent state machines. Draw two separate state diagrams: one for FF1 and one for EXEC2FF.

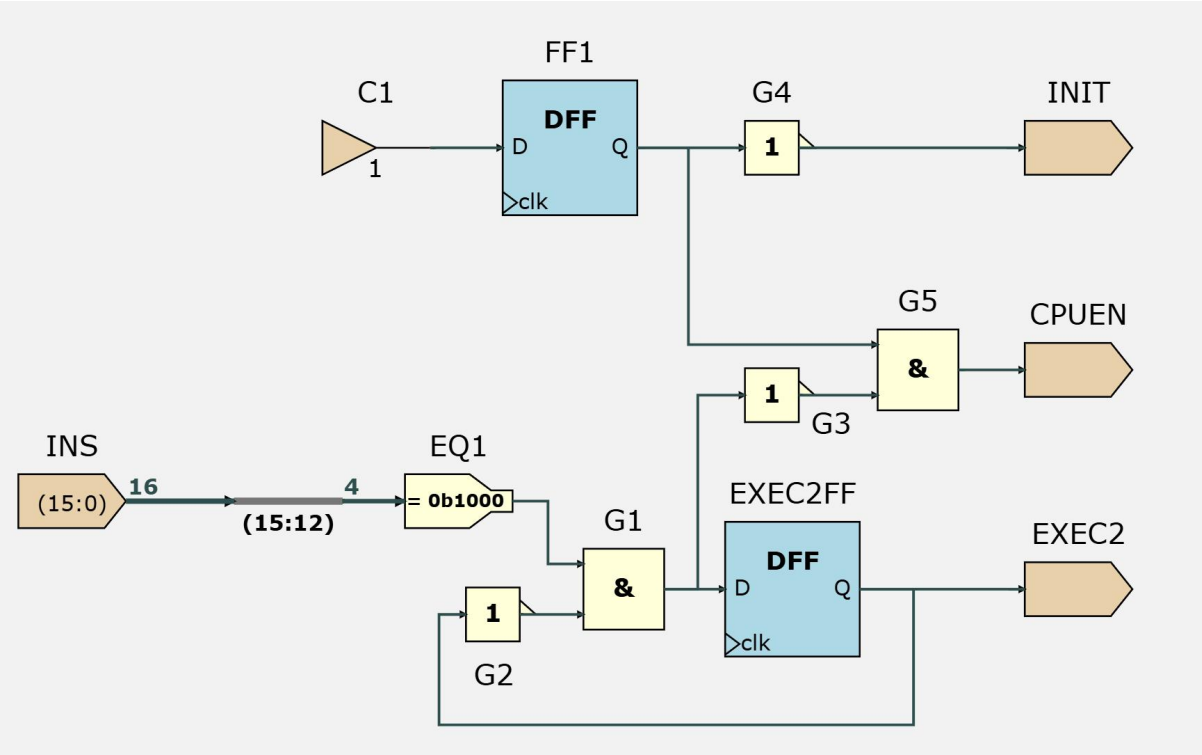

FF1 State Machine

FF1 implements a two-state machine that permanently transitions after the first clock cycle:

- **State FF1 = 0** (initial, power-on reset): INITV = 1. The first cycle is a dummy FETCH with no execution.
- **State FF1 = 1** (permanent): INITV = 0. FF1 can never return to 0; the pipeline runs normally from cycle 1 onwards.
- **Transition:** unconditional on the first rising clock edge after reset.

EXEC2FF State Machine

EXEC2FF implements a two-state machine that pulses high for exactly one cycle when a memory instruction is detected:

- **State EXEC2 = 0** (idle): the current instruction in EXEC1 is not LDR/STR. EXEC2V = 0.
- **State EXEC2 = 1** (active): asserted when INS[15:12] = 0b1000 (LDR/STR opcode) is detected in EXEC1. EXEC2V = 1 for one cycle only.
- **Transition back to EXEC2 = 0:** unconditional on the following rising clock edge, regardless of the next instruction.

The state diagram is on the next page.

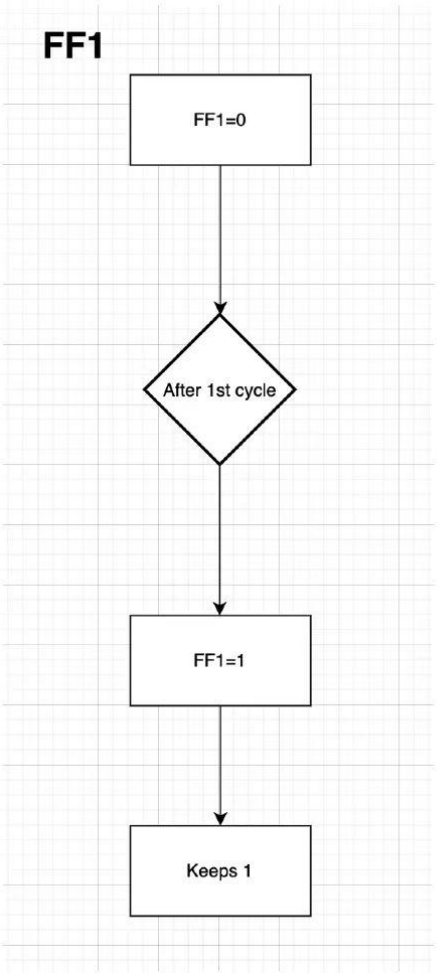

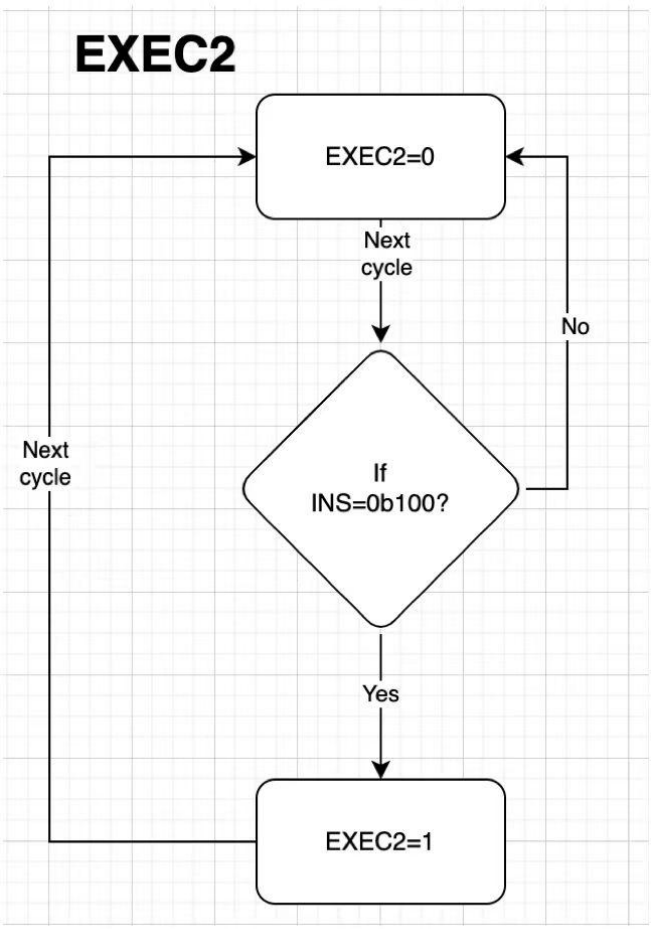

1.3 LDR vs STR Signal Timing

Figure 3 shows the pipeline stages for a program similar to testpipeline.txt. The STR (S2) instruction and the memory-interface signals for LDR and STR have been added at the appropriate points. Explain the different timing of these signals for LDR and STR.

Machine cycle →	0	1	2	3	4	5	6	7
	N => not LDR or STR, L => LDR, S => STR							
FETCH	N1	N2	L3	N4	N4	S5	N6	
EXEC1		N1	N2	L3		N4	S5	N6
EXEC2					L3			
ADDR, WEN				L3			S5	
DIN							S5	
DOUT					L3			

Figure 3: EEP1P pipeline diagram

Signal	LDR	STR
EXEC1	Computes memory address; asserts EXEC2 to request EXEC2 stage. Data RAM is not yet accessed.	Computes address; places register value onto the data bus. Write occurs in EXEC2.
EXEC2	Data RAM output is latched into DOUTREG. EXEC2V enables register-file write — the loaded value is written to the destination register.	RAM write-enable is asserted during EXEC2V; data is committed to memory. No register-file write occurs.

Key timing difference: for LDR, the data value is only available after EXEC2 completes and DOUTREG is written. For STR, the source register is read during EXEC1 and the write to RAM is completed during EXEC2 with no read-back to registers. This asymmetry is the root cause of the load-use pipeline stall.

1.4 INITV Waveform and Effect on Cycle 0

Using your FF1 state diagram, explain the INITV waveform and describe its effect on clock cycle 0. EXEC2V is high during EXEC2: determine from your EXEC2FF state diagram when this occurs and check that this matches Figure 3.

Since FF1 starts at 0 after reset, INITV (= NOT FF1) is high during clock cycle 0. This forces the pipeline into an initialisation state: a dummy fetch is performed without any instruction being executed. The PC is held at 0x0000 and no register writes occur. After the first rising clock edge FF1 permanently becomes 1, so INITV falls and remains low for all subsequent cycles.

Verification against Figure 3: EXEC2V is high during cycle 4 (the EXEC2 stage of the LDR instruction L3). According to the EXEC2FF state diagram, EXEC2FF transitions to 1 when INS[15:12] = 0b1000 is detected in EXEC1 (cycle 3 for L3), and returns to 0 the following cycle. This produces a single-cycle pulse at cycle 4, which matches the pipeline diagram in Figure 3.